BLIZZARD 2700

CB Base Station Antenna

DESCRIPTION

The most modern technology and the most advanced instruments have been used for the realization of SIRIO 827, the new base antenna with remarkable characteristics. It is made of Silicium Magnesium Aluminium tubes of big dimensions drawn and cemented on the surface to get the maximum strenght of the main whip. The coil, made of enamelled copper wire of big section, has been specially planned in order to bear high powers. It adopts the exclusive system C.A.C.S. (Coil Auto-Cooling System) which allows the auto-cooling by a finned support that keeps the coil hanging up allowing the air circulation.

SPECIFICATIONS

Electrical Data

Type	: 5/8 λ Ground Plane
Frequency range	: 26...28 MHz tunable (see table)
Impedance	: 50 Ω
Radiation (H-plane)	: 360° omnidirectional
Polarization	: Linear Vertical
Gain	: 1.5 dBd, 3.65 dBi
Bandwidth @ SWR ≤2	: ≥ 2000 KHz (180 channel)
SWR @ res. freq.	: ≤ 1.1
Max Power	: 1000 Watts (CW) continuous
	: 3000 Watts (CW) short time
Feed system/ position	: Transformer DC-ground / base
Connector	: UHF-female

Mechanical Data

Materials	: Aluminium, Steel, Copper, Nylon
Wind Load/ Resistance	: 264 N @ 150Km/h / 130 Km/h
Wind surface	: 0.23 m²
Length (approx.)	: 6700 mm
Weigth (approx.)	: 6000 gr
Radial lenght	: 1400 mm
Mounting Mast	: Ø 35-39 mm

TYPICAL S.W.R. RESPONSE

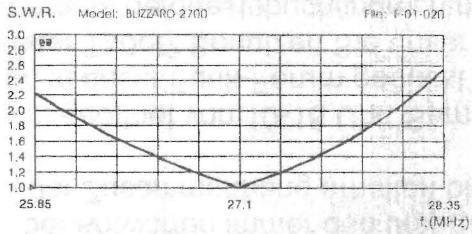

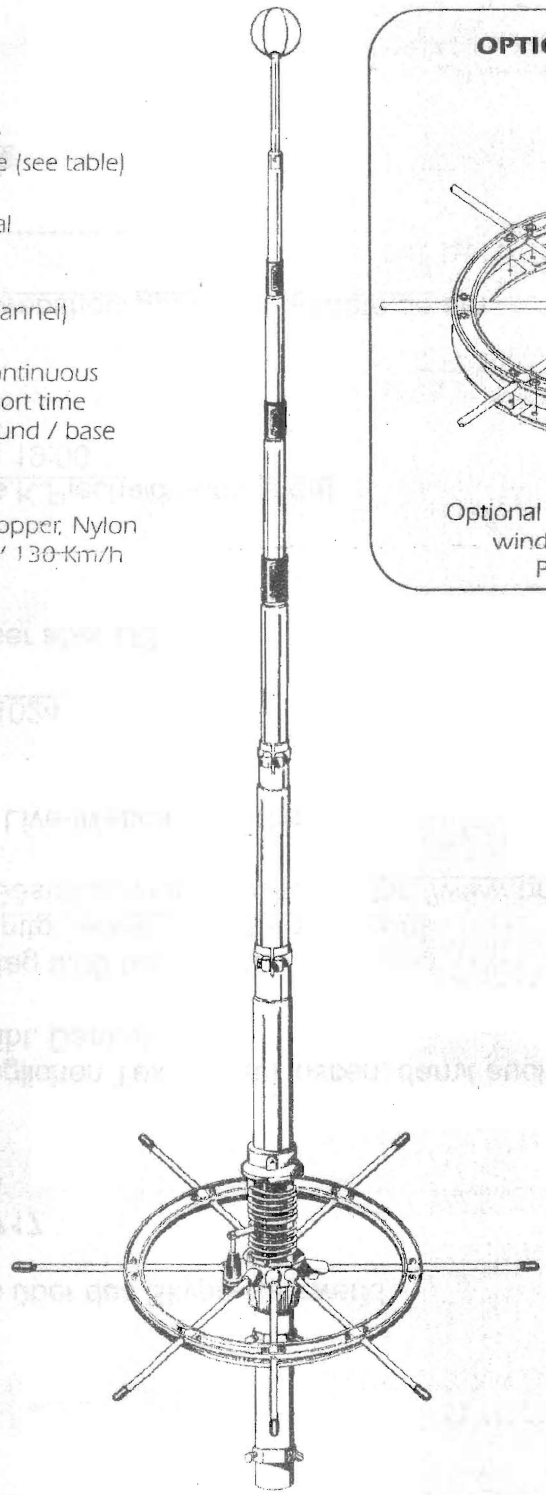

OPTIONAL ANTI NOISE NYLON RING

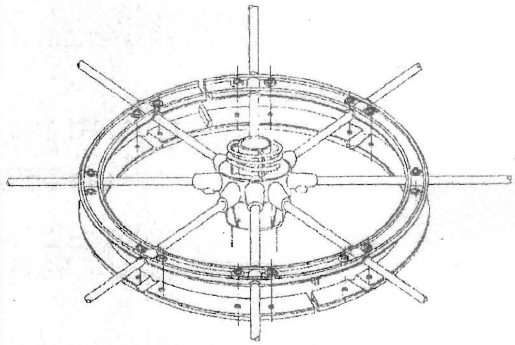

Optional nylon ring to reduce the wind noise of the radials.
P/N: 2511011.00

SIRIO HI-QUALITY ANTENNAS MADE IN ITALY

TUNING TABLE

Freq. (MHz)	L (mm)
26.0	670
26.5	474
27.0	300
(Ch.19 CB) 27.185	250
27.5	151
28.0	10

Mounting needed tools:
n. 1 tape rules (meter)
n. 1 phillips screwdriver
n. 1 10 mm open key
n. 1 13 mm open key

Parts List

Pos	Q.ty	Description
1	1	4 sections telescopic aluminium whip
2	3	plastic jointing sleeves (4 different sizes)
3	6	∅ 3.9x6.5 phillips tapping screws
4	1	top section with cage
5	1	M4x4 hexagon socket set screw cup point
6	1	2mm hexagonal key
7	1	∅ 33.5x37x1100 mm aluminium tube
8	1	∅ 32-35 mm hose clamp
9	1	Bottom section assembled with coil and connetor
10	1	∅ 40-43 mm hose clamp
11	9	PVC caps for ∅ 8 mm aluminium tube
12	8	∅ 6x8x1400mm aluminium tubes
13	8	brass radials reinforces
14	8	M6x6 hexagon socket set screws cup point
15	1	3mm hexagonal key
16	2	AISI 302 stainless steel rings
17	4	M8x30 exagon head screws
18	4	M8 square nuts

MOUNTING INSTRUCTIONS

1

Pull out the sections of telescopic aluminium whip (**1**), insert the plastic jointing sleeves (**2**) and lock they using the screws (**3**).
Insert the top part with cage (**4**) at L (see tuning table for frequency) and lock it using the screw (**5**) and 2mm hexagonal key (**6**).
NOTE: Use the table just as a guide. For fine-tuning please use an SWR-meter

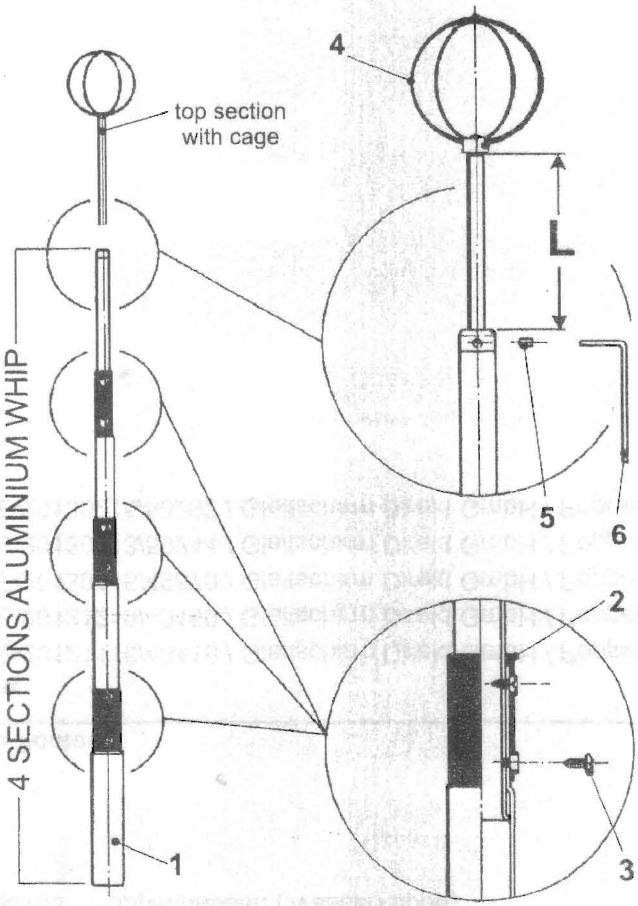

2

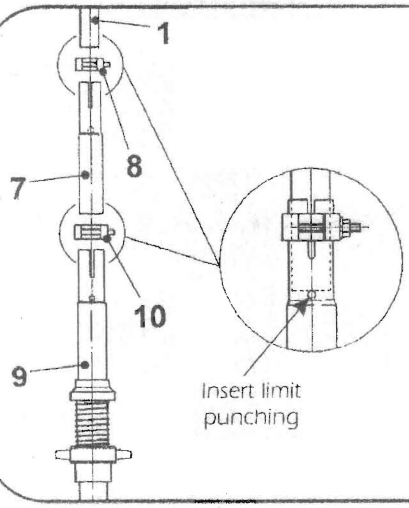

Fit the whip (**1**) on the tube (**7**) using the hose clamp (**8**).
Mount the tube (**7**) on the bottom part with coil (**9**) and lock it using the hose clamp (**10**).

3

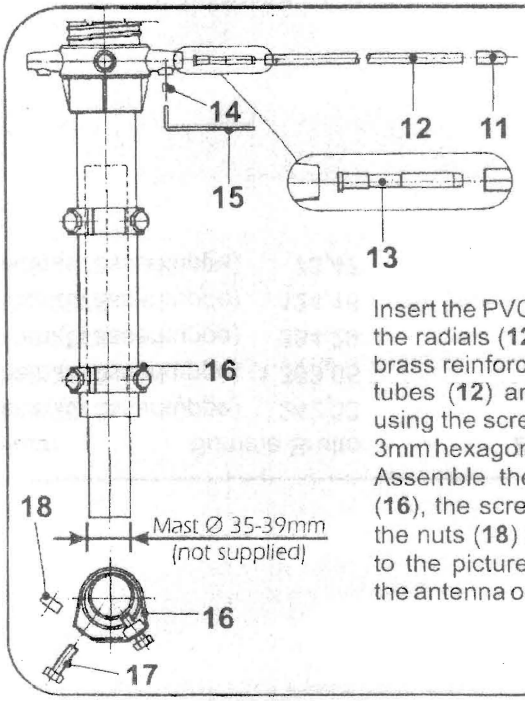

Insert the PVC cap (**11**) on the radials (**12**). Insert the brass reinforce (**13**) in the tubes (**12**) and lock they using the screws (**14**) and 3mm hexagonal key (**15**).
Assemble the fixing ring (**16**), the screws (**17**) and the nuts (**18**) in according to the picture and mount the antenna on the mast.

SIRIO antenne HI-QUALITY ANTENNAS MADE IN ITALY

© Copyright SIRIO antenne - Technical Data are subjected to change - Printed in ITALY - Rev. 16/10/2008 - Cod. ID100